From: Schriever, James W
To: McLees, Robert;
Subject: Daily Crime Report for 03-18-10
Date: Friday, March 19, 2010 7:36:57 AM
Attachments: image002.png
03-18- crime report.pdf

Community Partners; attached is the Central Patrol Division Crime Report for March 18th, 2010.

In 2009, Central Patrol Division reported 683 Residential Burglaries which averages to 1.8 a day. Even though this is a 27% decrease from 2008, we believe these numbers can be reduced further with education and installation of a few prevention devices. Officers are available to conduct free home security surveys which provide suggestions on how to take steps to protect yourself and your property. If interested, please phone or e-mail me to get scheduled.

Burglary Prevention Tip

Door jambs are usually constructed of soft wood and provide little protection against forced entry. The jamb will frequently break near the strike plate when force is applied against the locked door.
Reinforce the door jamb on the interior side near the door locks.

1. Install a heavier gauge strike

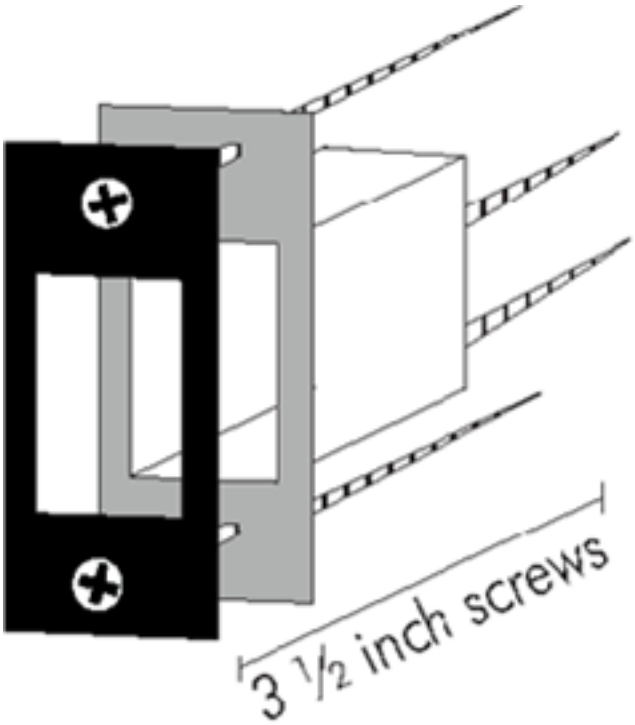

plate (four or six holes) rather than the one that came with the lock set. Attach this strike plate with at least 3″ screws that extend back into the stud behind the strike plate.

2. Install what is commonly known as a Jamb Brace or Door Club. Jam Brace is a rectangular shaped piece of aluminum, which is installed behind the trim piece of the door jamb and out of sight. The throw of the deadbolt, when locked, passes through a hole in the brace. If force is used on your door, the jamb brace disperses the force throughout the door jamb, not just at the location of the deadbolt. Information on both items can be located on the internet.

Master Patrol Officer James Schriever, CIO, Central Patrol Division, Office 816-759-6313, Cell 816-719-8350